www.co.carlton.mn.us

twitter.com/carltoncountymn

covid19-carltoncounty.hub.arcgis.com/

facebook.com/carltoncountymn

CARLTON COUNTY
Minnesota

Local
Postal Customer

PRSRT STD
ECRWSS
U.S. POSTAGE
PAID
EDDM RETAIL

Keeping Carlton County Healthy

Hello to all residents and visitors to Carlton County.

We hope this finds you and your loved ones well in these challenging times of COVID-19. This mailer is intended to be a reminder that it continues to be important to practice good hygiene and proper social distancing, and how to do so. We also want you to know that our county offices continue to be available to serve you even if access is limited. This mailer includes the contact information for each office on Page 8. Please use that information to help you plan how to best access county services, as county operations are fluid at this time.

Thank you! ~ The Carlton County Board of Commissioners

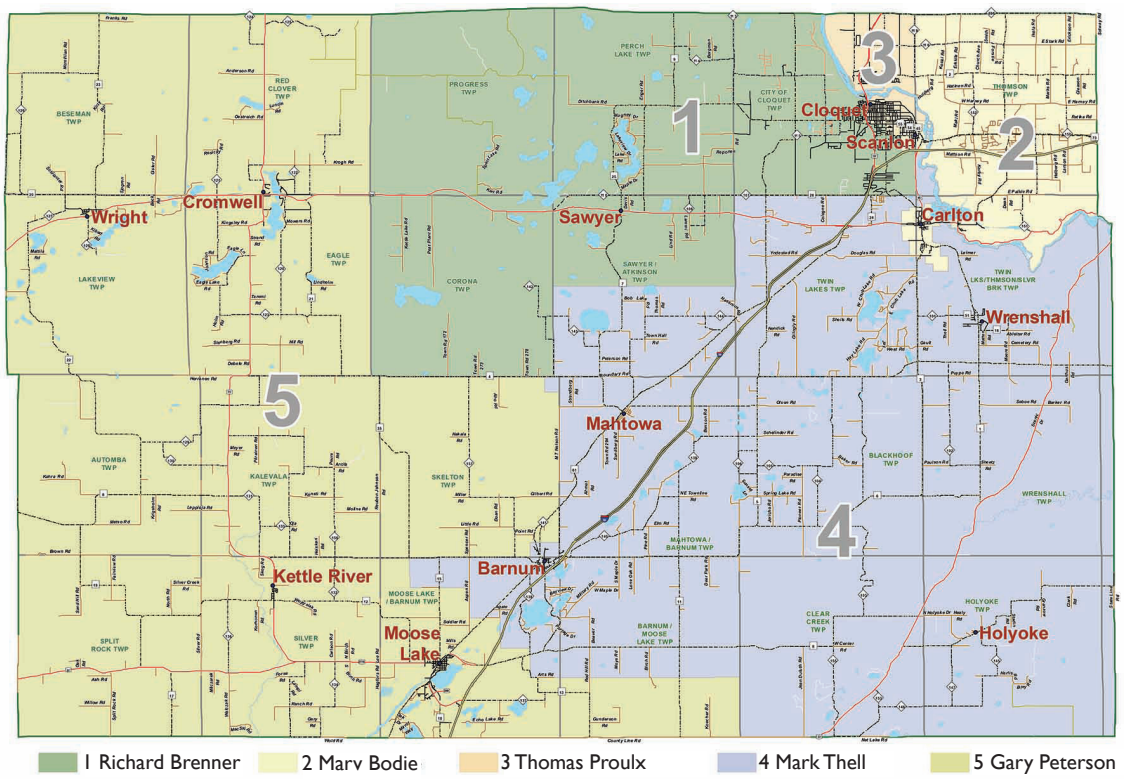

1 Richard Brenner 2 Mary Bodie 3 Thomas Proulx 4 Mark Thell 5 Gary Peterson

Inside

PAGE 2
- What is COVID-19?
- How should you react?

PAGE 3
- Who's at risk?
- Local testing

PAGE 4
- Everything you need to know about masks

PAGE 5
- Getting around
- Keeping things clean

PAGE 6-7
- Taking care of yourself mentally and physcially

PAGE 8
- County information
- Veterans' services

COVID-19: What is it?

COVID-19 is a new disease, caused by a novel (or new) coronavirus that has not previously been seen in humans. The name of this disease was selected following the World Health Organization (WHO) best practice for naming of new human infectious diseases. The name of this disease is coronavirus disease 2019, abbreviated as COVID-19. "CO" stands for corona, "VI" for virus, and "D" for disease.

The virus that causes COVID-19 is thought to spread mainly from person to person, mainly through respiratory droplets produced when an infected person coughs or sneezes. These droplets can land in the mouths or noses of people who are nearby or possibly be inhaled into the lungs. Spread is more likely when people are in close contact with one another (within about 6 feet), according to the Centers for Disease Control and Prevention.

COVID-19 seems to be spreading easily and sustainably in the community (community spread) in many affected geographic areas. Community spread means people have been infected with the virus in an area, including some who are not sure how or where they became infected.

The purpose of this guide is to give you information to help prevent the spread of COVID-19, and what to do if you think you might have been infected.

Hotlines

- The Minnesota Department of Health has set up a COVID-19 public hotline open from 8 a.m. to 6 p.m. weekdays and 8 a.m. to 4 p.m. weekends. The hotline number is 651-201-3920 or 1-800-657-3903.
- Community Memorial Hospital and the CMH Raiter Clinic are asking people who think they should be tested to call the 24-hour Nurse Hotline at 218-499-6799.
- Other regional health care hotlines include Essentia Health at 1-833-494-0836 and St. Luke's at 218-249-4200.

On the web

- **Carlton County COVID-19 Hub**: covid19-carltoncounty.hub.arcgis.com
- **Stay Safe Minnesota**: www.mn.gov/covid19
- **Minnesota Department of Health**: www.health.state.mn.us/diseases/coronavirus/index.html
- **Centers for Disease Control and Prevention**: www.cdc.gov/coronavirus/2019-ncov/index.html
- **World Health Organization**: www.who.int/emergencies/diseases/novel-coronavirus-2019

Sick space

Bedroom and bathroom

Keep separate bedroom and bathroom for a person who is sick, if possible.

The person who is sick should stay separated from others in the home as much as possible. If you have to share space, make sure the room has good air flow. Open the window and turn on a fan (if possible) to increase air circulation.

Wear disposable gloves and clean only the area around the person who is sick when needed, such as when the area is soiled. This will help limit your contact with the person who is sick.

Caregivers can provide personal cleaning supplies to the person who is sick (if appropriate). Supplies include tissues, paper towels, cleaners, and disinfectant. If they feel up to it, the person who is sick can clean their own space.

If shared bathroom: The person who is sick should clean and disinfect after each use. If this is not possible, the caregiver should wait as long as possible before cleaning and disinfecting.

Food

Stay separated: The person who is sick should eat (or be fed) in their room if possible.

Wash dishes and utensils using disposable gloves and hot water: Handle any used dishes, cups/glasses, or silverware with gloves. Wash them with soap and hot water or in a dishwasher.

Clean hands after handling items.

Trash

If possible, dedicate a lined trash can for the person who is sick. Use disposable gloves when removing garbage bags, and handling and disposing of trash. Wash hands afterwards.

MINNESOTA DEPARTMENT OF HEALTH

STAY SAFE MN

Is it COVID-19?

COVID-19 symptoms can include fever, cough, and shortness of breath. This may be similar to other illnesses, like the flu and common cold. Many people with COVID-19 have mild or few symptoms, and some may have no symptoms at all.

If you have symptoms of COVID-19, you should get tested. Talk to your health care provider or visit mn.gov/covid19. **For medical emergencies, such as difficulty breathing, call 911.**

SYMPTOMS	COVID-19	FLU	COLD	ALLERGIES
Cough	Often	Often	Sometimes	Sometimes
Fever	Often	Often	Rarely	Never
Body aches	Sometimes	Often	Rarely	Never
Shortness of breath	Sometimes	Sometimes	Rarely	Rarely
Headache	Sometimes	Often	Sometimes	Sometimes
Fatigue	Sometimes	Often	Sometimes	Sometimes
Sore throat	Sometimes	Sometimes	Sometimes	Sometimes
Loss of taste or smell	Sometimes	Rarely	Rarely	Rarely
Diarrhea	Sometimes	Rarely	Never	Never
Chest pain or pressure	Rarely	Rarely	Never	Never
Runny nose	Rarely	Sometimes	Often	Often
Sneezing	Rarely	Sometimes	Often	Often
Watery eyes	Never	Never	Never	Often

This list is not all-inclusive.

Get help

If your illness is getting worse or you notice any of these emergency warning signs, call your health care provider, or 911, right away. Emergency warning signs can include:

- Trouble breathing
- Ongoing pain or pressure in the chest
- New confusion or not being able to wake up
- Bluish lips or face

Who's at risk?

COVID-19 is a new disease and there is limited information about risk factors for severe disease. Based on currently available information and clinical expertise, older adults and people of any age who have serious underlying medical conditions might be at higher risk for severe illness from COVID-19.

Based on what the Centers for Disease Control knows now, those at high risk for severe illness from COVID-19 are:

• People aged 65 years and older

• People who live in a nursing home or long-term care facility

• People of all ages with underlying medical conditions, particularly if not well controlled, including:

- People with chronic lung disease or moderate to severe asthma
- People who have serious heart conditions
- People who are immunocompromised, including cancer treatment, smoking, bone marrow or organ transplantation, immune deficiencies, poorly controlled HIV or AIDS, and prolonged use of corticosteroids and other immune weakening medications
- People with severe obesity (body mass index [BMI] ≥40)
- People with diabetes
- People with chronic kidney disease undergoing dialysis
- People with liver disease

If you are at higher risk of getting very sick from COVID-19, you should:

• Stock up on supplies. Use delivery or curb-side services for groceries where available.

• Take everyday precautions to keep space between yourself and others

• When you go out in public, keep away from others who are sick

• Limit close contact and wash your hands often. Avoid sharing personal items.

• Avoid crowds and non-essential travel

If there is an outbreak in your community, stay home as much as possible. Watch for symptoms and emergency signs. If you get sick, stay home and call your doctor. And follow the advice in this guide.

If you or someone you know is experiencing symptoms (fever, cough, shortness of breath, chills, headache, muscle pain, sore throat, or loss of taste or smell), get tested. Talk with your health care provider about next steps and/or find a testing site here: **mn.gov/covid19/for-minnesotans/if-sick/testing-locations/index.jsp**

Local testing

COVID-19 testing in Carlton County:

• **CMH Raiter Clinic** has a mobile testing site in the parking lot from 8 a.m. to 4:30 p.m. Monday-Friday, but a doctor's order is necessary before testing. Call 218-879-1271 to talk to a doctor. They will also accept orders from doctors outside CMH. The CMH Nurse Hotline is also available 24/7 at 218-499-6799 for advice.

• **FDL Human Services** has a mobile testing site by appointment only at Min No Aya Win Human Services Center. Testing will be limited to those who are experiencing symptoms and who have had a telehealth visit with their Fond du Lac medical provider. Call 218-878-2120 to schedule a visit if you're having symptoms.

• **MedExpress Urgent Care** is providing COVID-19 testing at the clinic located at Pine Tree Plaza in Cloquet (by Super One). If you are seeking COVID-19 testing, visit www.medexpress.com/covid19 to review the CDC-based screening criteria prior to visiting. If you believe the screening criteria apply to you, call the local clinic at 218-878-7903. Hours are 8 a.m. to 8 p.m.

• **Gateway Family Clinic** in Moose Lake offers COVID-19 testing with a doctor's order. Call 218-485-4491 to arrange to speak with a physician.

• **Cromwell Medical Clinic** offers COVID-19 testing with a doctor's order. Call 218-644-3811 to arrange to speak with a physician.

All about the mask

Masks or cloth face coverings can help with preventing your germs from infecting others – especially in situations where you may spread the virus without symptoms. Wearing a cloth face covering may not protect you from others who may spread the virus. While people who are sick or know that they have COVID-19 should isolate at home, COVID-19 can be spread by people who do not have symptoms and do not know that they are infected. That is why it is important for everyone to practice social distancing (staying at least 6 feet away from other people) and wear cloth face coverings in public settings.
Cloth face coverings provide an extra layer to help prevent the respiratory droplets from traveling in the air and onto other people. You still need to wash your hands frequently, cover your cough, and stay home if you are feeling sick, unless seeking medical care. Some people with certain health conditions might not be able to wear a mask, so be kind and wear a mask if you can.

How cloth face coverings work

Cloth face coverings may prevent the person wearing the mask from spreading respiratory droplets when talking, sneezing, or coughing. If everyone wears a cloth face covering when out in public, such as going to the grocery store, the risk of exposure to SARS-CoV-2 can be reduced for the community. Since people may spread the virus before symptoms start, or even if people never have symptoms, wearing a cloth face covering may protect others around you. Face coverings worn by others may protect you from getting the virus from people carrying the virus.

General considerations for the use of cloth face coverings

When using a cloth face covering, make sure:

- The mouth and nose are fully covered
- The covering fits snugly against the sides of the face so there are no gaps
- You do not have any difficulty breathing while wearing the cloth face covering
- The cloth face covering can be tied or otherwise secured to prevent slipping

Wash your cloth face covering after each use in the washing machine or by hand using a bleach solution Allow it to completely dry.

Quick Cut T-shirt Cloth Face Covering (no sew method)

Materials

- T-shirt
- Scissors

Tutorial

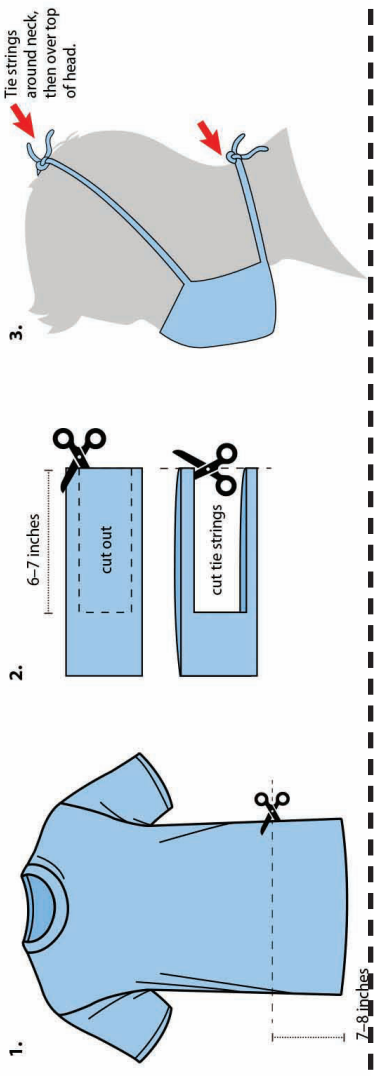

Bandana Cloth Face Covering (no sew method)

Materials

- Bandana (or square cotton cloth approximately 20"x20")
- Rubber bands (or hair ties)
- Scissors (if you are cutting your own cloth)

Tutorial

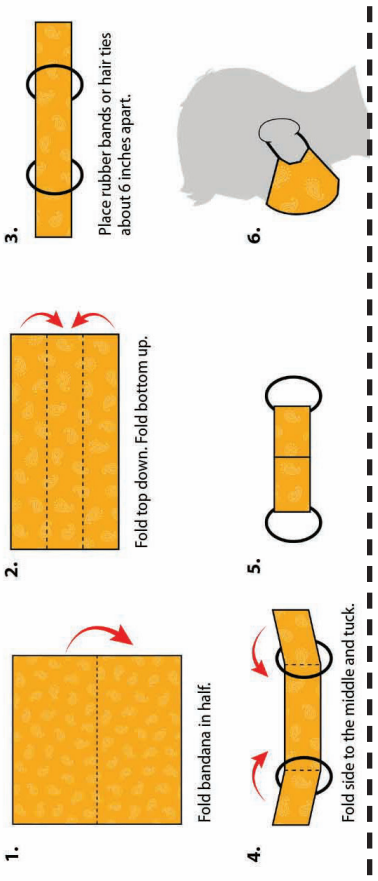

Sewn Cloth Face Covering

Materials

- Two 10"x6" rectangles of cotton fabric
- Two 6" pieces of elastic (or rubber bands, string, cloth strips, or hair ties)
- Needle and thread (or bobby pin)
- Scissors
- Sewing machine

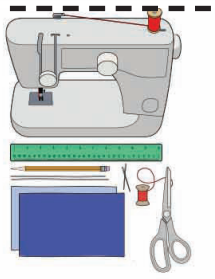

Tutorial

1. Cut out two 10-by-6-inch rectangles of cotton fabric. Use tightly woven cotton, such as quilting fabric or cotton sheets. T-shirt fabric will work in a pinch. Stack the two rectangles; you will sew the cloth face covering as if it was a single piece of fabric.

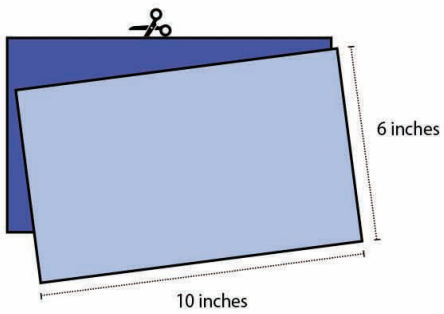

2. Fold over the long sides ¼ inch and hem. Then fold the double layer of fabric over ½ inch along the short sides and stitch down.

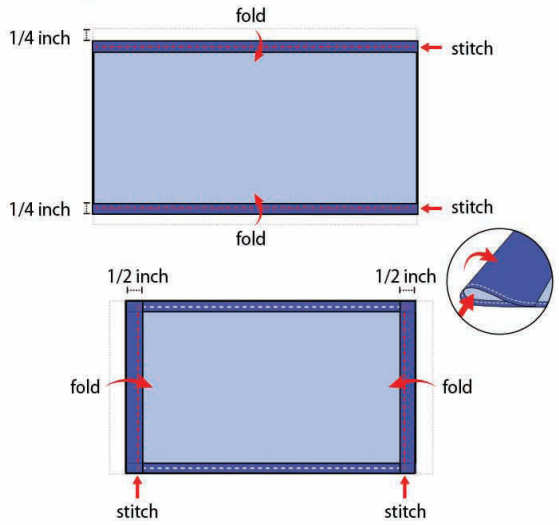

3. Run a 6-inch length of 1/8-inch wide elastic through the wider hem on each side of the cloth face covering. These will be the ear loops. Use a large needle or a bobby pin to thread it through. Tie the ends tight.
Don't have elastic? Use hair ties or elastic head bands. If you only have string, you can make the ties longer and tie the cloth face covering behind your head.

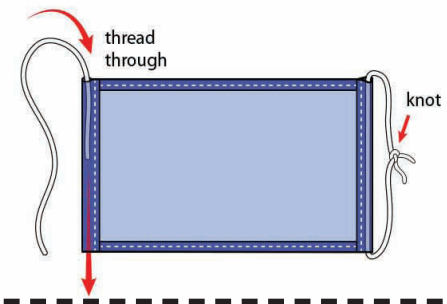

4. Gently pull on the elastic so that the knots are tucked inside the hem.
Gather the sides of the cloth face covering on the elastic and adjust so the mask fits your face. Then securely stitch the elastic in place to keep it from slipping.

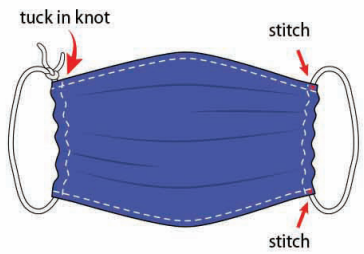

Out and about

In going about your daily lives, follow these recommendations from the Centers for Disease Control:

Protect yourself while shopping

Stay at least 6 feet away from others while shopping and in lines.

Cover your mouth and nose with a cloth face covering when you have to go out in public.

When you do have to visit in person, go during hours when fewer people will be there (for example, early morning or late night).

If you are at higher risk for severe illness, find out if the store has special hours for people at higher risk. If they do, try to shop during those hours. People at higher risk for severe illness include adults 65 or older and people of any age who have serious underlying medical conditions.

Disinfect the shopping cart, use disinfecting wipes if available.

Do not touch your eyes, nose, or mouth.

If possible, use touchless payment (pay without touching money, a card, or a keypad). If you must handle money or a card, or use a keypad, use hand sanitizer right after paying.

After leaving the store, use hand sanitizer.

When you get home

When you get home, wash your hands with soap and water for at least 20 seconds.

At home, follow food safety guidelines: clean, separate, cook, chill. There is no evidence that food or food packaging has been linked to getting sick from COVID-19.

Accepting deliveries and takeout

Limit in person contact if possible.

Pay online or on the phone, if possible.

Accept deliveries without in-person contact whenever possible. Ask for deliveries to be left in a safe spot outside your house (such as your front porch or lobby), with no person-to-person interaction. Otherwise, stay at least 6 feet away from the delivery person.

Wash your hands or use hand sanitizer after accepting deliveries or collecting mail

After receiving your delivery or bringing home your takeout food, wash your hands with soap and water for 20 seconds. If soap and water are not available, use a hand sanitizer with at least 60 percent alcohol.

After collecting mail from a post office or home mailbox, wash your hands with soap and water for at least 20 seconds or use a hand sanitizer with at least 60 percent alcohol.

Banking

Bank online or over the phone when possible.

Use drive-thru banking services, ATM, or mobile banking apps for routine transactions that do not require face-to-face assistance as much as possible.

Look for any extra prevention practices being implemented by the bank, such as plexiglass barriers for tellers or bankers, staff wearing cloth face coverings, or physical distancing signs in the lobby.

Wear a cloth face covering when doing any in-person exchanges and unable to stay at least 6 feet apart from other people – and make sure that bank employees and other people inside the bank are also wearing cloth face coverings.

Use hand sanitizer containing at least 60 percent alcohol after any deposit, withdrawal, exchange, drive-thru visit, or use of an ATM.

Getting Gasoline

Use disinfecting wipes on handles or buttons before you touch them.

After fueling, use a hand sanitizer with at least 60-percent alcohol. Wash your hands for at least 20 seconds when you get home or somewhere with soap and water.

Going to the doctor or getting medicine

Use telemedicine if available, or contact your doctor or nurse by phone or e-mail first.

If you think you have COVID-19, let the office know and follow doctor's guidance.

If you must visit in person, protect yourself and others.

Cover your mouth and nose with a cloth face covering when you have to go out in public.

Do not touch your eyes, nose, or mouth.

Use disinfecting wipes on frequently touched surfaces such as handles, knobs, touchpads.

Stay at least 6 feet away from others while inside and in lines.

When paying, use touchless payment methods if possible. If you cannot use touchless payment, sanitize your hands after paying. Wash your hands with soap and water for at least 20 seconds when you get home.

Limit in-person visits to the pharmacy. Plan to order and pick up all your prescriptions at the same time.

If possible, call prescription orders in ahead of time. Use drive-thru windows, curbside services (wait in your car), mail-order, or delivery services. Do the same for pet medicine.

Check with your doctor and pharmacist to see if you can get a larger supply of your medicines so you do not have to visit the pharmacy as often.

Clean and disinfect

Clean

Wear reusable or disposable gloves for routine cleaning and disinfection.

Clean surfaces using soap and water, then use disinfectant.

Cleaning with soap and water reduces number of germs, dirt and impurities on the surface. Disinfecting kills germs on surfaces.

Practice routine cleaning of frequently touched surfaces. High touch surfaces include tables, doorknobs, light switches, countertops, handles, desks, phones, keyboards, toilets, faucets, sinks, etc.

Diluted household bleach solutions may also be used if appropriate for the surface.

Check the label to see if your bleach is intended for disinfection and has a sodium hypochlorite concentration of 5%–6%. Ensure the product is not past its expiration date. Some bleaches, such as those designed for safe use on colored clothing or for whitening, may not disinfect.

Unexpired household bleach will be effective against coronaviruses when properly diluted.

Follow manufacturer's instructions for application and proper ventilation. Never mix household bleach with ammonia or any other cleanser. Leave solution on the surface for at least 1 minute.

To make a bleach solution, mix:

5 tablespoons (1/3rd cup) bleach per gallon of room temperature water

or

4 teaspoons bleach per quart of room temperature water

Bleach solutions will be effective for disinfection up to 24 hours.

Alcohol solutions with at least 70 percent alcohol may be used.

Electronics

Consider putting a wipeable cover on electronics.

Follow manufacturer's instruction for cleaning.

If no guidance, use alcohol-based wipes or sprays containing at least 70 percent alcohol. Dry surface.

Laundry

For clothing, towels, linens and other items:

Launder items according to the manufacturer's instructions. Use the warmest appropriate water setting and dry items completely.

Wear disposable gloves when handling dirty laundry from a person who is sick.

Dirty laundry from a person who is sick can be washed with other people's items.

Do not shake dirty laundry.

Clean and disinfect clothes hampers according to guidance above for surfaces.

Remove gloves, and wash hands right away.

Clean hands often

Clean hands immediately after removing gloves and after contact with a person who is sick and before and after providing routine care for another person who needs assistance (child).

- After blowing one's nose, coughing, or sneezing.
- After using the restroom.
- Before eating or preparing food.
- After contact with animals or pets.

Wash your hands often with soap and water for 20 seconds.

Hand sanitizer: If soap and water are not available and hands are not visibly dirty, use a hand sanitizer that contains at least 60 percent alcohol.

Take care

Being physically active is especially important during the COVID-19 pandemic.
Physical activity helps keep you healthy and reduces stress.
When going outside, remember to stay at least 6 feet from other people.

3-5 minutes of physical movement will:
• Help ease muscle strain • Relieve mental tension
• Improve blood circulation and muscle activity • Improve mental wellbeing

www.co.carlton.mn.us Carlton County

Foster personal wellness:
Remember you must first be healthy in order to care for others. Healthy lifestyle factors such as getting adequate rest, eating nutritious foods, getting exercise and drinking water can strengthen your body as you adapt to stress.

Stay connected:
While practicing social distancing, it is important to stay connected with loved ones. Use social media, telephone, and email to remain connected with those who are your strongest support system.

Cultivate healthy thoughts:
Resist the idea to consume too much media. Instead, chose to limit your exposure to only certain reliable sources such as the Center for Disease Control & Prevention's (CDC) website, Minnesota Department of Health (MDH) website or Carlton County website.
Practice gratitude – each day, spend a few moments intentionally stopping and thinking about what you have to be thankful for.

Look for ways to grow: Reconnect with old hobbies or find a new one. You many have loved to paint or garden in the past and found it relaxing. Consider picking up that paint brush or garden trowel again. Focus on others. Try focusing on the needs of others and how you can meet those needs in a tangible way.
Reflect on ways in which you are growing as a result of this struggle. Perhaps you are getting more quality time with your children or learning just how adjustable you are in the face of stress.
Acknowledge and name these areas of personal growth.

Two warmlines are available to Minnesota residents who may be experiencing increased anxiety, depression, or other distress during this stressful time.

- Wellness in the Woods provides peer-to-peer telephone support every day from 5pm-9am. This can be accessed by calling 1-844-739-6369.
- Mental Health Minnesota provides volunteer staffed telephone support Monday through Saturday from 5pm-10pm. This can be accessed by calling 651-288-0400.

Conflict Resolution Strategies during COVID-19

This unprecedented period of social distancing and stay-at-home orders gives couples and families wonderful opportunities to reconnect. While time together is a gift, it can also be a catalyst for disharmony and conflict – especially with the underlying triggers of "homeschooling" or distance learning, work-from-home, unemployment, and disrupted routines. We are obliged to stay at home and with no escape and nerves on edge, negative comments can escalate quickly into full-blow arguments or worse. Consider the following tips to prevent escalation:

- **Create a personal safe space:** When emotions are running high, it is okay to take a break from each other. Each family member should have a designated area that they can go to for alone time. When conflicts are escalating let your partner or family member know you are walking away to take a break and you will discuss the issues at a later time.
- **Think before you speak:** We all usually say things we regret at one time or another. When emotions are running high, slow down, silently count to ten and gather your thoughts before you speak.
- **Discuss your concerns once everyone is calm:** After you have had time to cool down and both parties agree that it is time, express your concerns clearly. Avoid placing blame by using "I" statements instead of "you" statements. Words such as "always" and "never" can cause a defensive reaction and you should try and avoid using them.
- **Maintain family routines:** This is important to prevent your household from being chaotic. Recognize that children and adults are all impacted by social distancing and school closures. Humans need structure to feel a sense of security that routines provide. Find ways to connect with each other like playing a game, taking a walk, eat dinner or other meals together, share what was the best part of your day.

If you feel that you or your child is in danger, **please contact 911** or contact Family Pathways at 1-800-338-SAFE (toll free), 24hours a day, or connect via the internet at www.familypathways.org.

News about infectious disease outbreaks like COVID-19 can cause anxiety or stress. This is normal and you are not alone. Take the time to monitor your own physical and mental health. Here are resources for processing and/or crisis:

MENTAL HEALTH CARE

State officials are encouraging teachers, students and anyone struggling with mental health to text "MN" to 741741.

Peer-to-peer telephone support is available from Wellness in the Woods at 1-844-739-6369 from 5 p.m. to 9 a.m. daily.

Mental Health Minnesota is staffed by volunteer support from 5-10 p.m. Monday through Saturday at 651-288-0400.

The National Suicide Prevention Lifeline phone number is 1-800-273-8255.

The Salvation Army Northern Division has an Emotional and Spiritual Care Hotline at 877-220-4195, which operates seven days a week from 8 a.m. to 8 p.m. Trained Salvation Army staff and volunteers will be available to talk, listen, comfort, and pray for individuals, families and situations.

DOMESTIC ABUSE HELP

A statewide crisis hotline called Day One helps people suffering from domestic abuse at home: Call 866-223-1111 or text 612-399-9995.

The American Indian Community Housing Organization Dabinoo'igan Emergency Domestic Violence Shelter at 218-722-2247.

The Center Against Sexual and Domestic Abuse in Superior at 715-392-3136.

Safe Haven Shelter & Resource Center in Duluth at 218-728-6481.

Family Pathways, otherwise known as Refuge Network, at crisis line 800-338-7233.

The Fond du Lac social services advocacy program crisis line, 218-348-1817, is answered 24 hours a day, and staff can assist with reporting a crime to law enforcement, providing orders for protection and harassment orders, obtaining available community resources, and providing support.

What's open?

Hub Access

Submit Community Resource/Service

Submit Business Hour/Closure

Carlton County has created a hub to provide public awareness of community resources and services along with business hours and closures.

We're asking service and business owners to provide information to these community maps by submitting information under the "Maps & Reporting" section.

The hub can be accessed via the county's homepage or directly at bit.ly/CarltonCoHub

County operations

The Carlton County Board of Commissioners passed a resolution declaring Carlton County in a state of peacetime emergency due to the COVID-19 pandemic event effective March 23, 2020, and has added additional service delivery modifications to protect staff and the public.

During this time, we will continue delivering many of our services through alternate means and will be working to design new ways of delivering services that depend on face-to-face contact. Please check the county website for the most up-to-date information, as the situation is very fluid and will continue to change at www.co.carlton.mn.us.

Courthouse services

- **Auditor/Treasurer's Office**
Property Taxes (218) 384-9125
Real Estate Transactions (218) 384-9127
- **Assessor's Office** (218) 384-9142
- **Economic Development** (218) 384-9597
- **County Coordinator**
Administration (218) 384-9190
County Coordinator (218) 499-1573
- **Human Resources** (218) 384-9140
- **Property Management** (218) 481-2289
- **Recorder's Office**
Real Estate (218) 384-9122
Vital Records (218) 384-9156
- **Zoning and Environmental Services** (218) 384-9176
- **Probation** (218) 384-9188
- **Minnesota Sixth Judicial District Court** (218) 384-9578
- **Guardian Ad Litem**
– Timothy Dipuma (218) 384-9511

Law Enforcement Center

- **Attorney's office** (218) 384-9166
- **Sheriff's office** (218) 384-3236
- **Jail** (218) 384-4560

Extension, Chestnut Street services

- **Community and Family Initiatives Department** (218) 384-4284
- **Extension Office** (218) 384-3511

Community Services building

- **Public health and human services** (218) 879-4511
- **Motor vehicle and drivers licensing** (218) 879-5951
- **Veterans services** (218) 499-6838

Transportation building services

- **Land Department** (218) 384-9179
- **Transportation Department** (218) 384-9150

Veterans Linkage Line
your link to experts
minnesotaveteran.org | 1-888-LinkVet (546-5838)

The Minnesota Department of Veterans Affairs works closely with federal, state and community partners to link military veterans and their families with benefits they have earned. It has a host of help links on its website, mn.gov/mdva. The MDVA encourages veterans, military members and families to contact the Carlton County Veterans Service Officer for personal assistance and more information on eligibility and application to any programs, which includes help in dealing with COVID-19.

Carlton County Veterans Service Officer
Duane Brownie
218-499-6838
Email: duane.brownie@co.carlton.mn.us
Monday-Friday
8 a.m. - 4 p.m.

Financial Assistance, Homeless Veteran Prevention and Assistance, Minnesota Service CORE, Dental and Optical Assistance, Special Needs Grants, Surviving Spouse Education Benefit, and Veteran Education Assistance.

Veterans Crisis Line
1-800-273-8255 PRESS 1